Stock Code: **20056LEDDMG-SAT**

Collection: Trilogy

PRODUCT INFORMATION

Base: 20056
Parent: 20056LEDDMG
Mounting Type: Wall
UPC: 641594215243
Finish: Satin
Diffuser: N/A

PRODUCT MEASUREMENTS

FIXTURE

Length:
Width: 9.75"
Diameter
Height: 16"
Extension: 3.75"
Overall Height:

BACKPLATE / CANOPY

Length
Width:
Diameter:
Height:

TECHNICAL SPECIFICATIONS

SPECIFICATIONS

Frame Material: Steel
Diffuser Material: N/A
Lamping Type: SSL (Dedicated LED)
Jbox: Standard
Lamping Base: SSL
Lamp Wattage: 6 W
Lamp Quantity: 3
Total Wattage: 18 W
Voltage: 120v
Lamps Included: Yes

QUALIFICATIONS

Location Rating Wet
Certifitcation: UL (US/Canada) Listed
ADA Compliant: Yes
Energy Star: No
JA8 Compliant: Outdoor Only
Emergency Lighting: No
Marine Grade Finish: Yes
Warranty: 5 Year

PHOTOMETRICS

Dimmable: Yes
Nominial Lumens 1600 Lm
CRI: 80
Delivered Lumens: N/A
CCT: 3000K
Recommended Dimmers:
(TRIAC)LUTRON Skylark S-600 or S-600P; (TRIAC)LEVITON Surslide 6631; (TRIAC)LEVITON Sureslide 6633-P

ADDITIONAL NOTES

Project Name: _____
Location: _____
Type: _____
Quantity: _____
Notes:

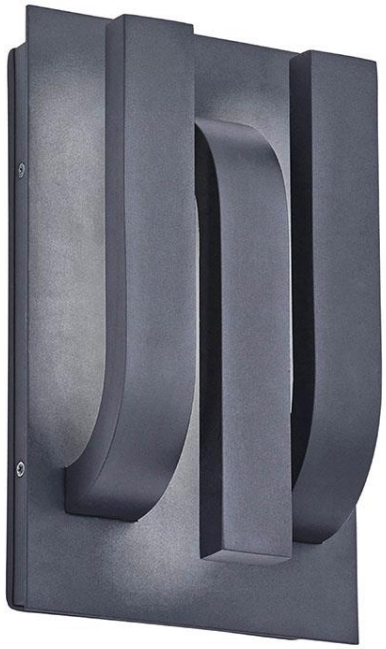

LINE DRAWING

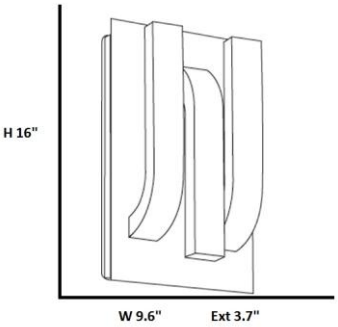

IES FILE

In addition to Access Lighting's purchase and warranty terms and conditions, by signing below or placing an order, you agree that you are authorized to bind the entity placing any order and acknowledge the following: All of sizes and measurements are approximate and all images are for illustrative purposes only. In the event of an inconsistency, the "Product Measurements" section controls. There also may be slight differences in the colors and designs compared to the displayed and printed images.

Signature: _____

Print Name _____ Date: _____